Paragon

1-800-451-8546 www.paragoninc.com

ASSEMBLY INSTRUCTIONS: 72" HIGH DOUBLE FACED SHELVING ADDER AND STARTER-METAL SHELVES (72 DFAM/DFSM)

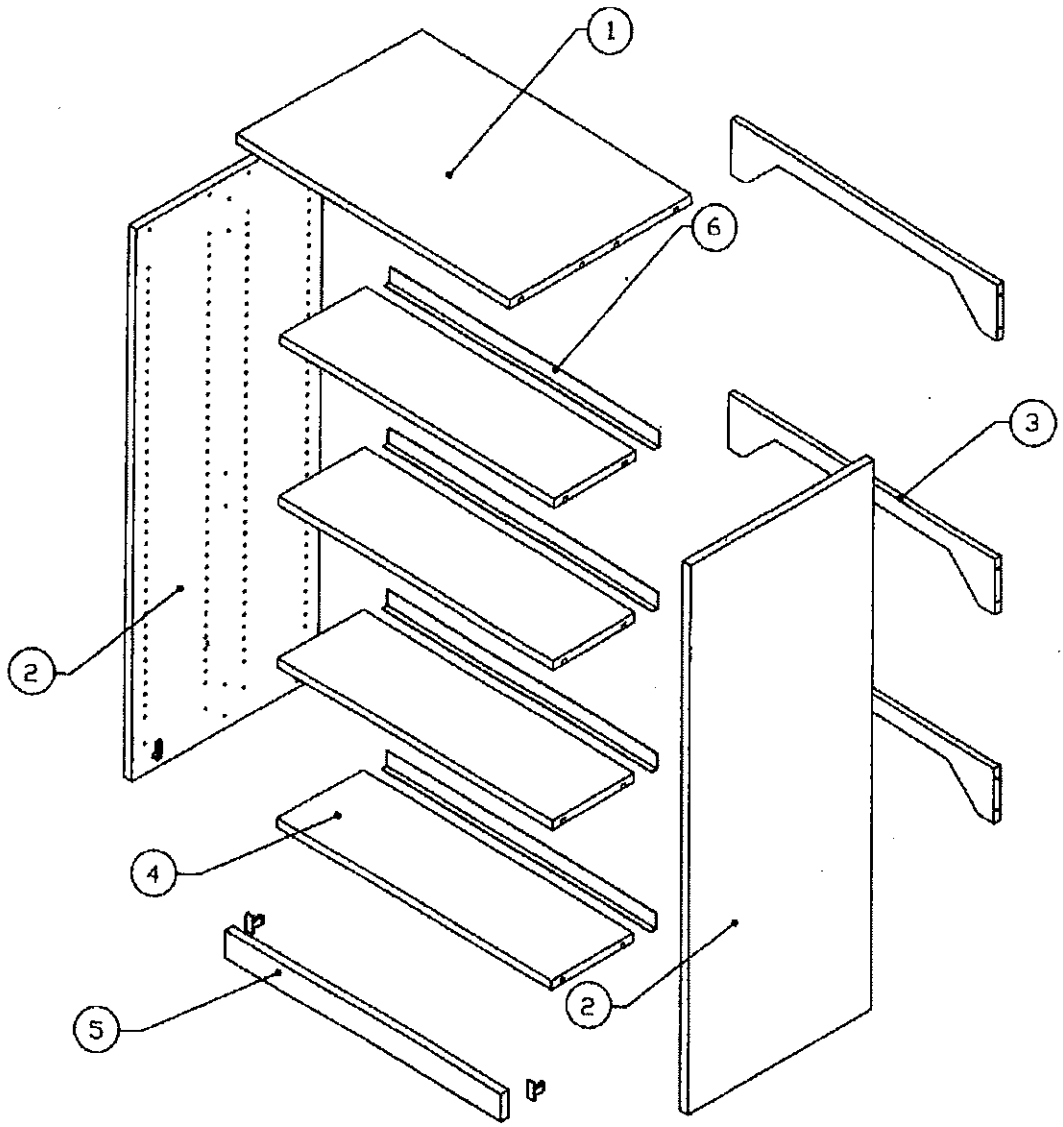

HARDWARE			
	QUANTITY	PART NUMBER	DESCRIPTION
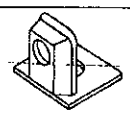	16	1010582	SCREW MOUNTED TAB V

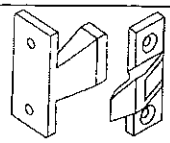	4	1010584	KEKU PRESS FIT FASTENER
	54	1010585	VARIANTI 13MM SCREW
	32	10105881	5MM SHELF SUPPORT
	8	1010589	#8-3/4" FLAT HEAD SCREW

USING THE SHELF CONNECTOR

Your shelving unit has been designed to assemble quickly using shelf connectors. Secure each connector as follows:

1. Slide shelf connector over locating screw.
2. Using a Phillips head screw driver, turn the shelf connector clockwise approximately one quarter turn to securely engage and lock the device.

NOTE: Your Phillips head screw driver should be approximately at a 5° angle from the surface you are connecting to for ease of assembly.

3. Test to see if the connection is secure by trying to separate the parts.
4. Proceed to next shelf connector and repeat.

USING THE TWIST LOCK FASTENER

Your shelving unit has been designed to assemble quickly using twist lock fasteners. Secure each fastener as follows:

1. Slide twist lock fastener over twist lock locating screw.
2. Using a Phillips head screw driver, turn the twist lock fastener clockwise approximately one quarter turn to securely engage and lock the device.

NOTE: Your Phillips head screw driver should be approximately at a 25° angle from the surface you are connecting to for ease of assembly.

3. Test to see if the connection is secure by trying to separate the parts.
4. Proceed to next twist lock and repeat.

INSTRUCTIONS

1. Using #8-3/4" flat head screws, assemble deflecta stop to all shelves. Using varianti 13mm screws, assemble female base connector to the base.
2. Lay the end panels on a clean scratch free surface and install the screw mounted tab v and male base connectors using varianti 13mm screws.
3. Install unitizer braces with variant 13mm screws. Be sure that screws are towards the back of the shelving unit. Next, install top and bottom shelf by tapping onto the connectors and locking them into place by turning varianti 13mm screws one half turn clockwise.

NOTE: It is recommended that these steps be done with two people and the shelving unit standing upright.

4. Install right end with the same methods used to install left end. Install base by tapping into place.
5. Install shelves in desired location and lock into place.

NOTE: We recommend installing all the shelf pins before the shelves.